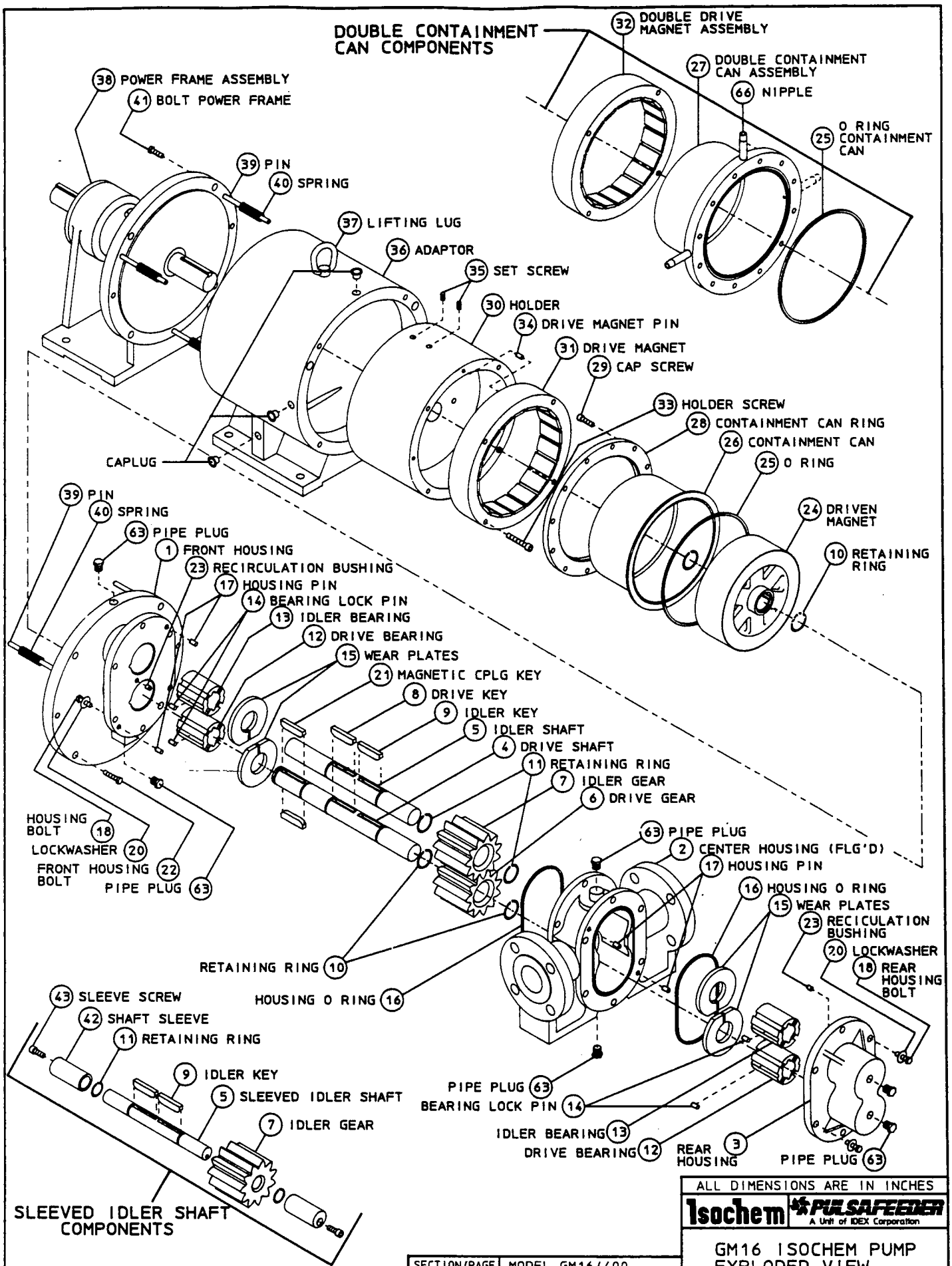

ALL DIMENSIONS ARE IN INCHES

Isochem | PULSAFEEDER A Unit of IDEX Corporation

GM16 ISOCHEM PUMP EXPLODED VIEW

REF	REVISION UPDATE	DATE

SECTION/PAGE	MODEL GM16/400
EFFECTIVE	04/04/94
SUPERSEDES	NEW

DWN BY: CLA
DATE: 04/04/94

SD-2781